The 4D Camera – A 87 kHz Frame-rate Detector for 4D-STEM Experiments

- *Peter Ercius (percius@lbl.gov)*

- *NERSC User Meeting 2020*
- *2020/08/17*

BERKELEY LAB

MOLECULAR FOUNDRY

4D-STEM Experiment

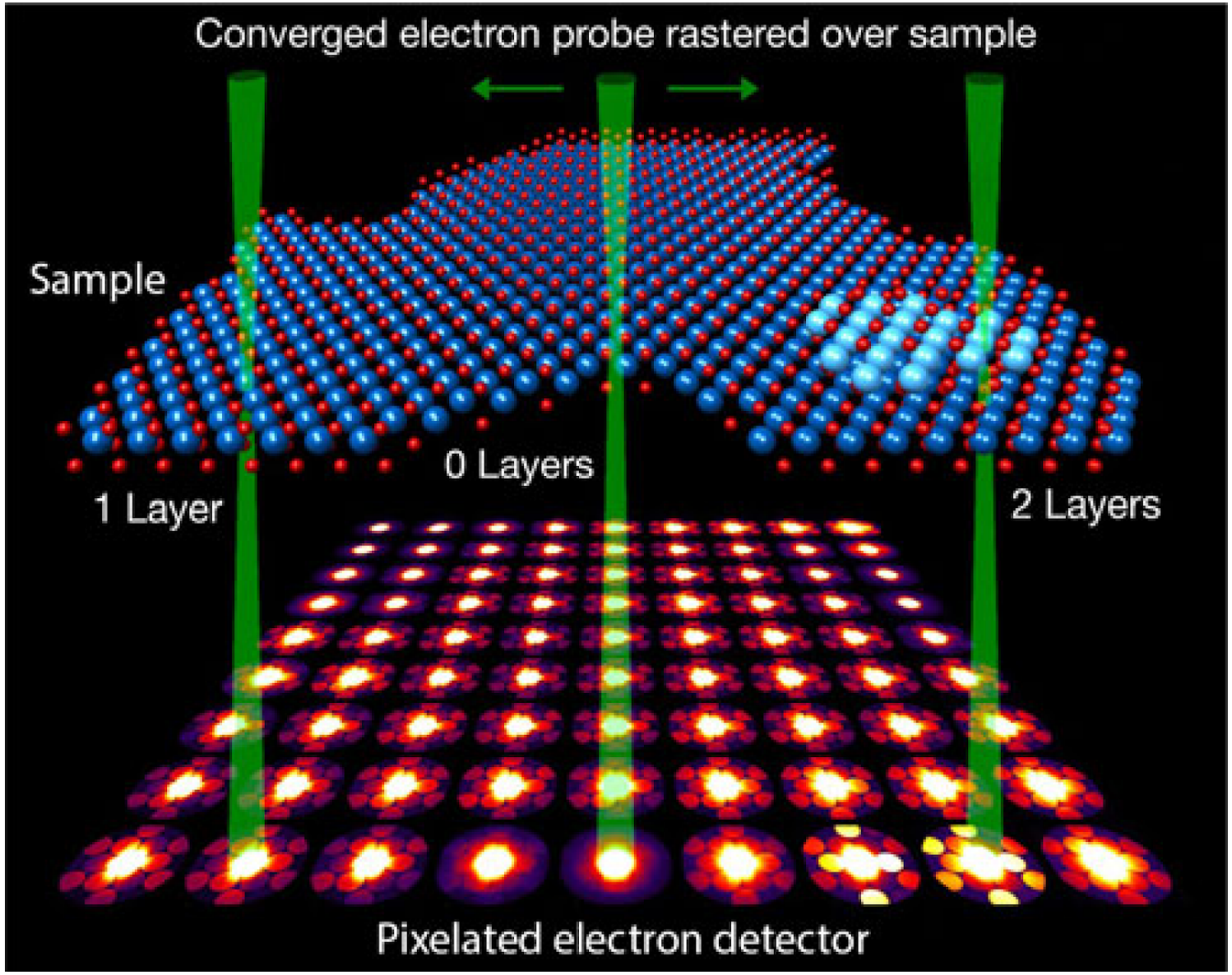

C Ophus, Microscopy and Microanalysis 25, 563–582 (2019)

[X, Y, Kx, Ky] = 4D

4D Camera Parameters

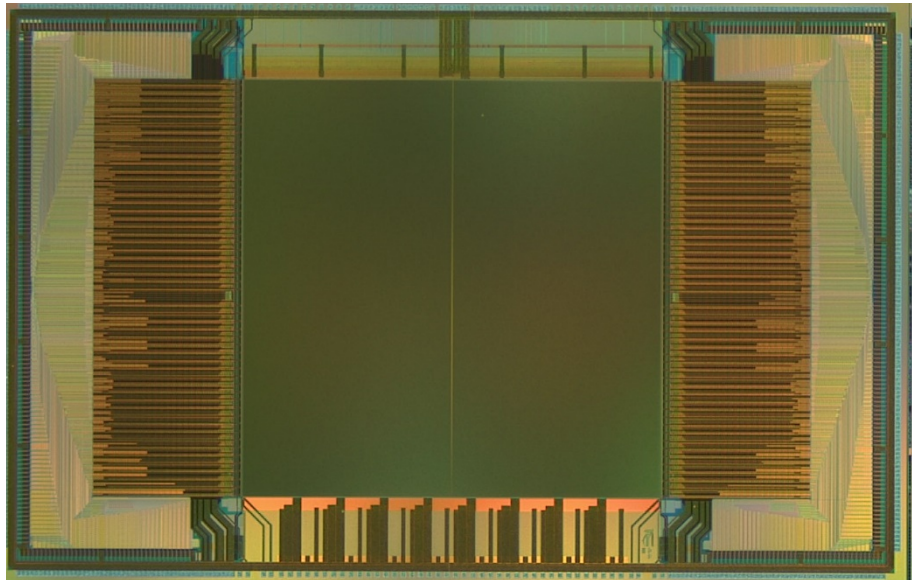

- CMOS Active Pixel Sensor
- 10 μm^2 pixel size
- Back thinned sensor
  - 30 – 300 kV
- 576 x 576 pixels
- 11 µsec read out
- Rolling shutter
- TEAM 0.5: Corrected Titan
- First electrons Spring 2019

Data Acquisition, Processing and Storage

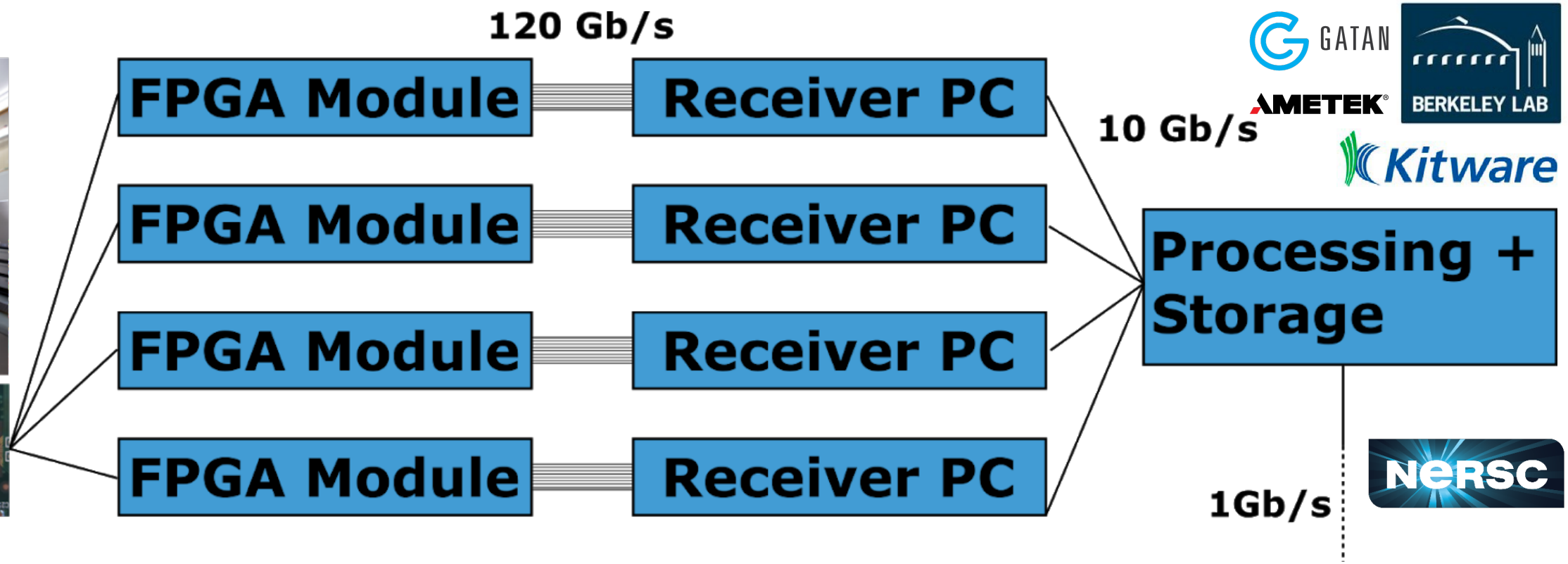

- 87,000 Hz (480 Gbit/s) readout (typical STEM scanning rates)
- 1kx1k scan is 650 GB captured in 15 seconds
- Data pipeline: FPGA → RAM → Flash storage → Sparse HDF5

15 sec **140 sec** **8.5 min**

What single frames look like

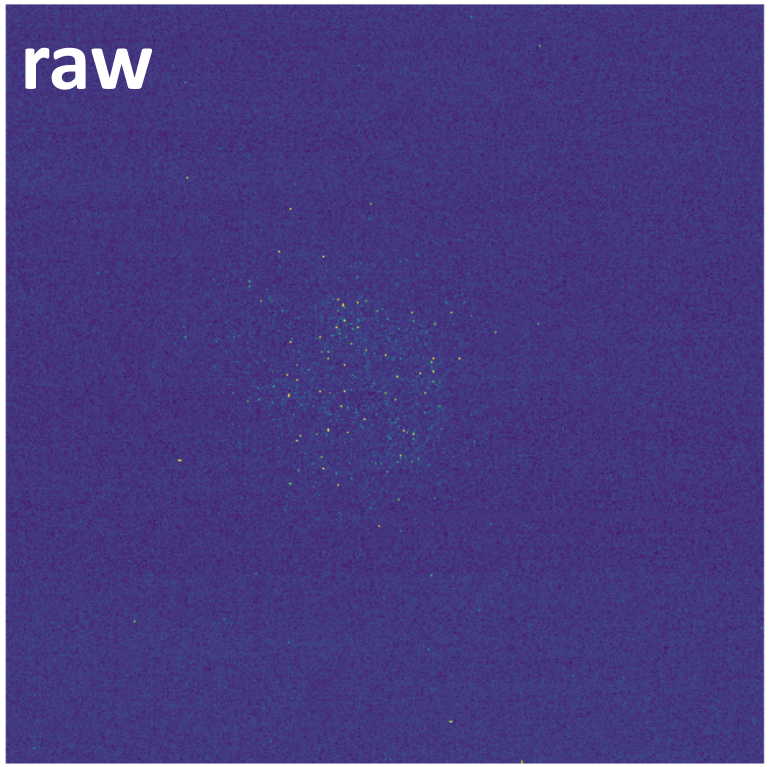

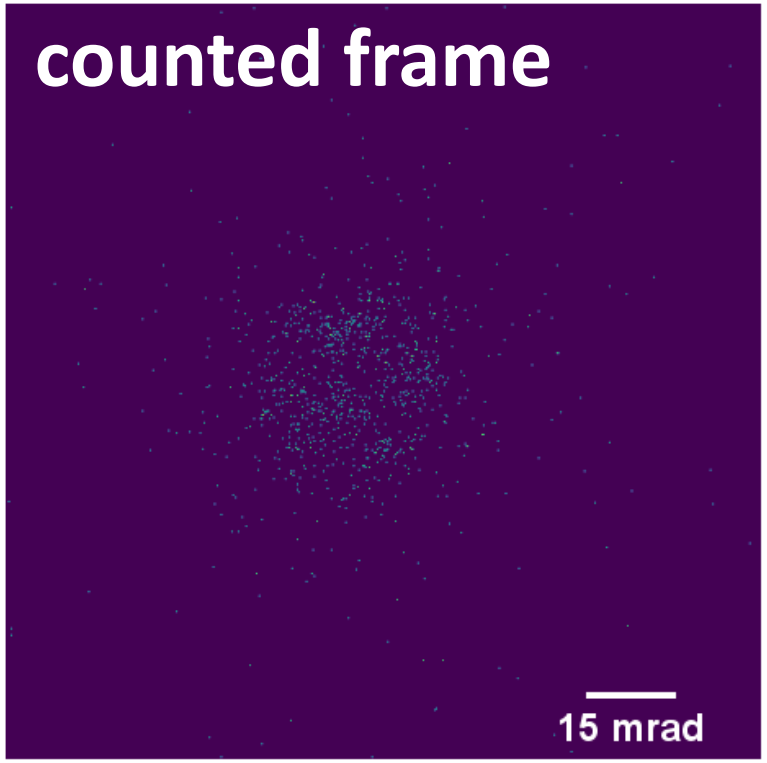

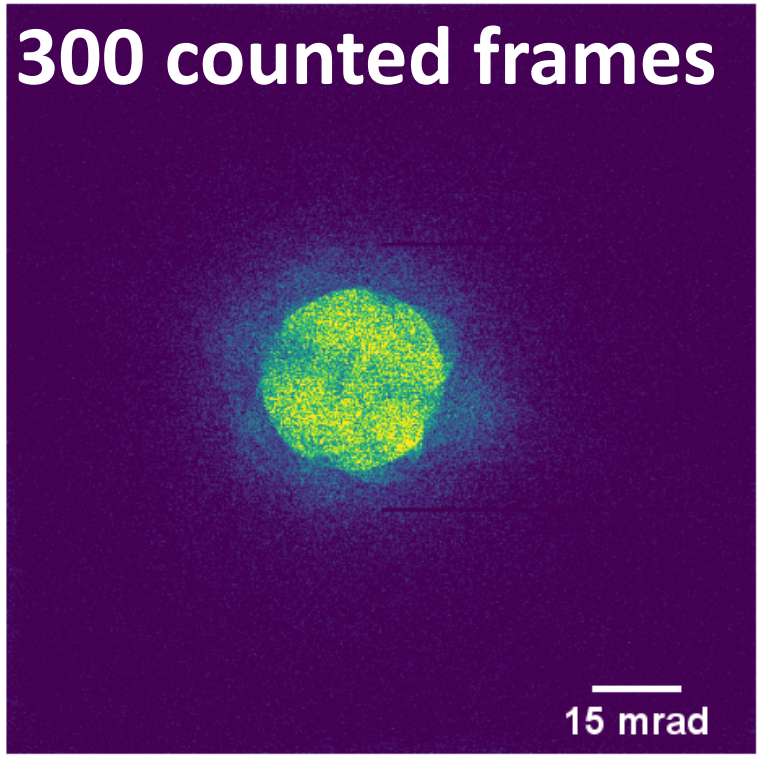

- Raw noisy frame, counted frame, sum of 300 frames
- 1% fill ‘factor’ allows ~3300 electrons per frame
- Possibly acquire multiple frames for each position (post acquire sum)
- 30 – 100x data reduction (650 GB → <20 GB)

Rapid to Live Processing

Kitware https://github.com/OpenChemistry/stempy

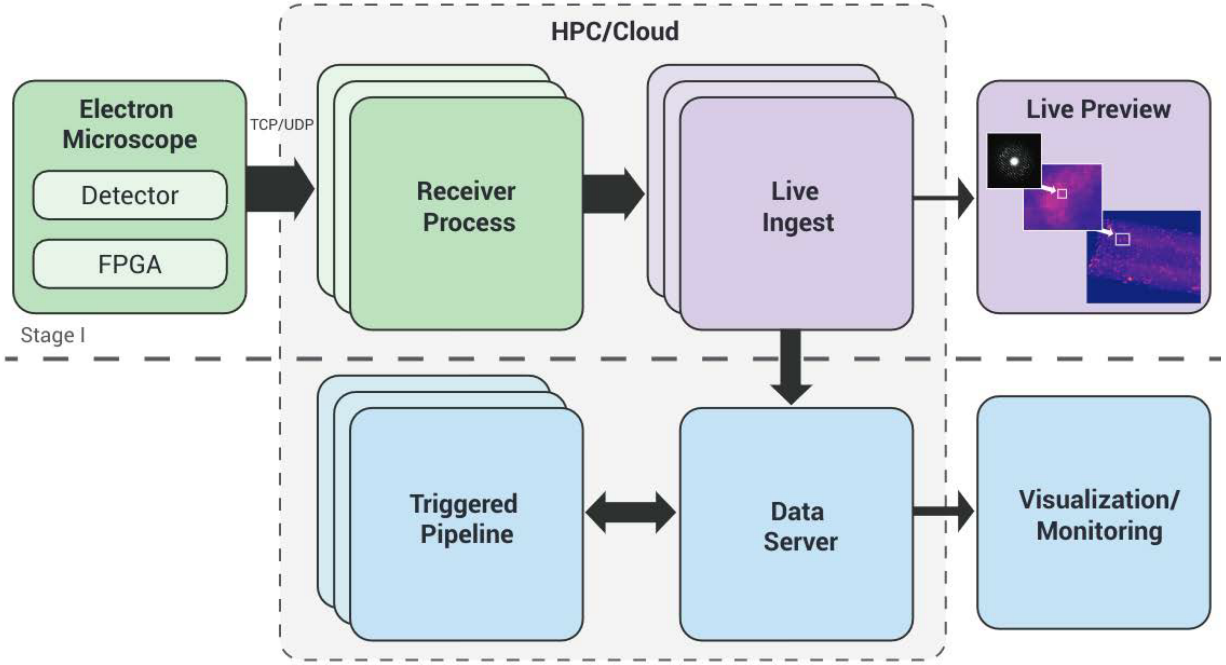

jupyter NERSC

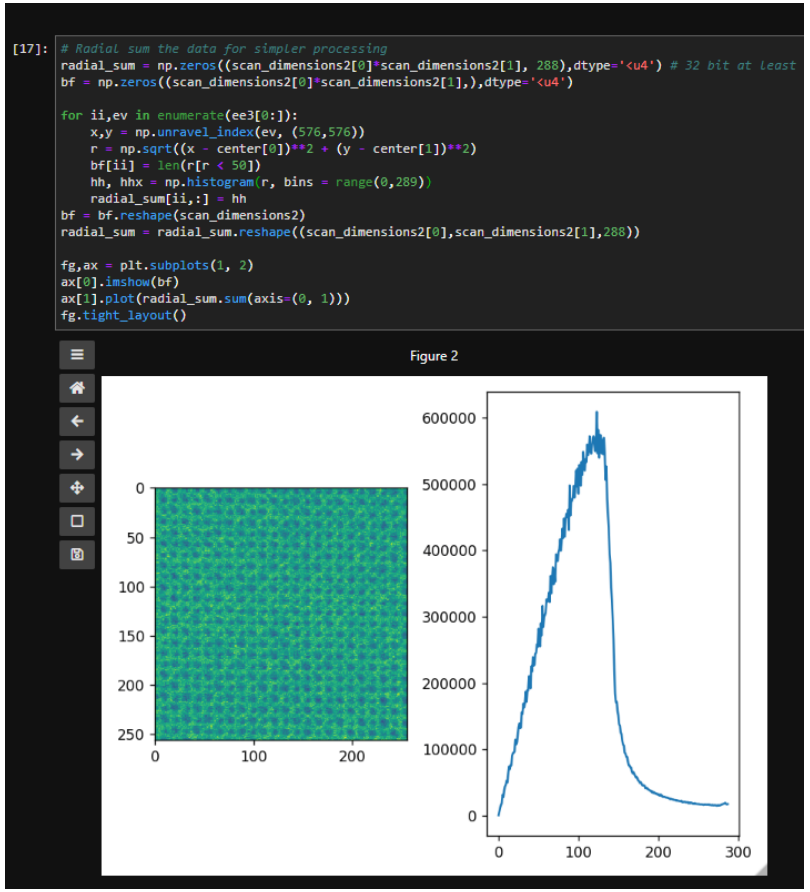

- Powerful open-source processing ecosystem
  - Local and remote high performance computing
- Is the data useful?
  - Needs minute scale reduction, efficient data representation and storage
  - Fast processing to useful information
  - Fits in memory, easily processed

M Hanwell, C Harris, Kitware, Inc.

High Resolution 4D-STEM Analysis

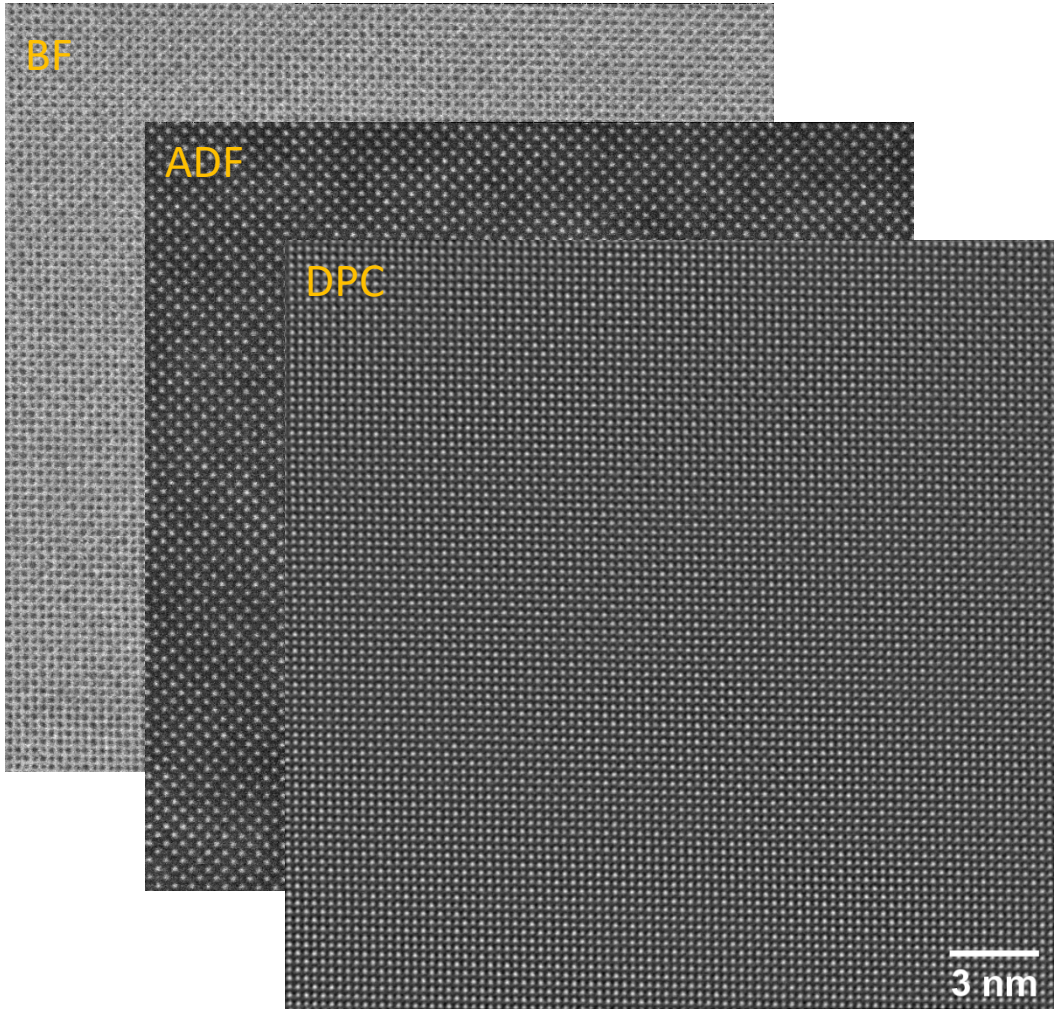

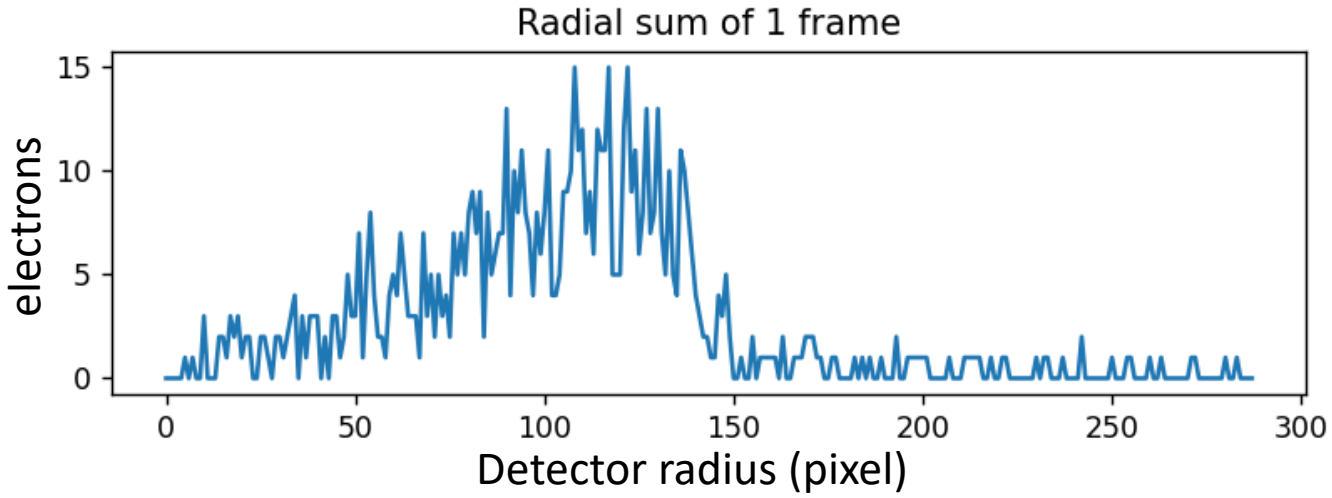

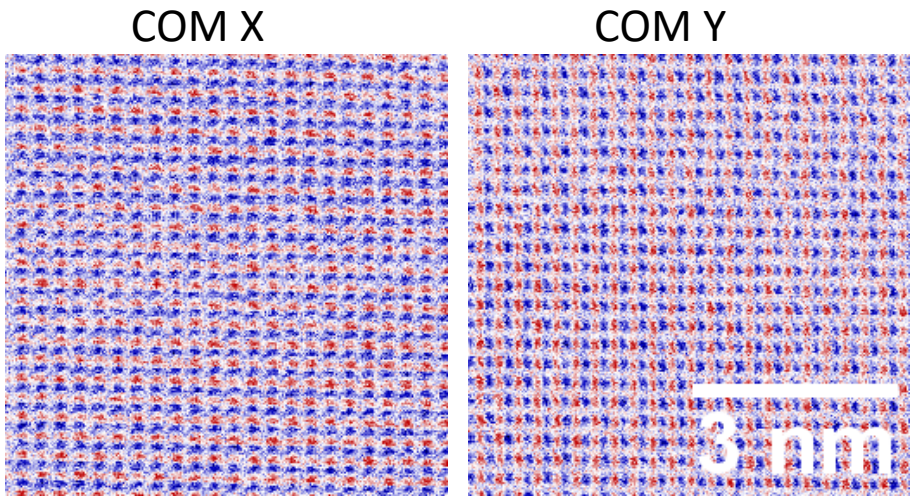

- STO [100]: 200 kV, 1kx1k (650 GB) in a 3.6 GB HDF5 file (185x reduction)
- All operations on sparse counted data. No summing or binning.

S Hsu, R Ramesh, UC Berkeley

Near/Far Future Upgrades

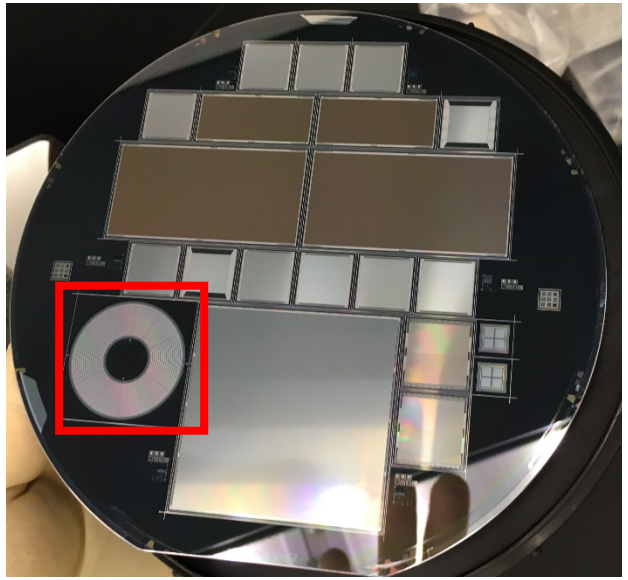

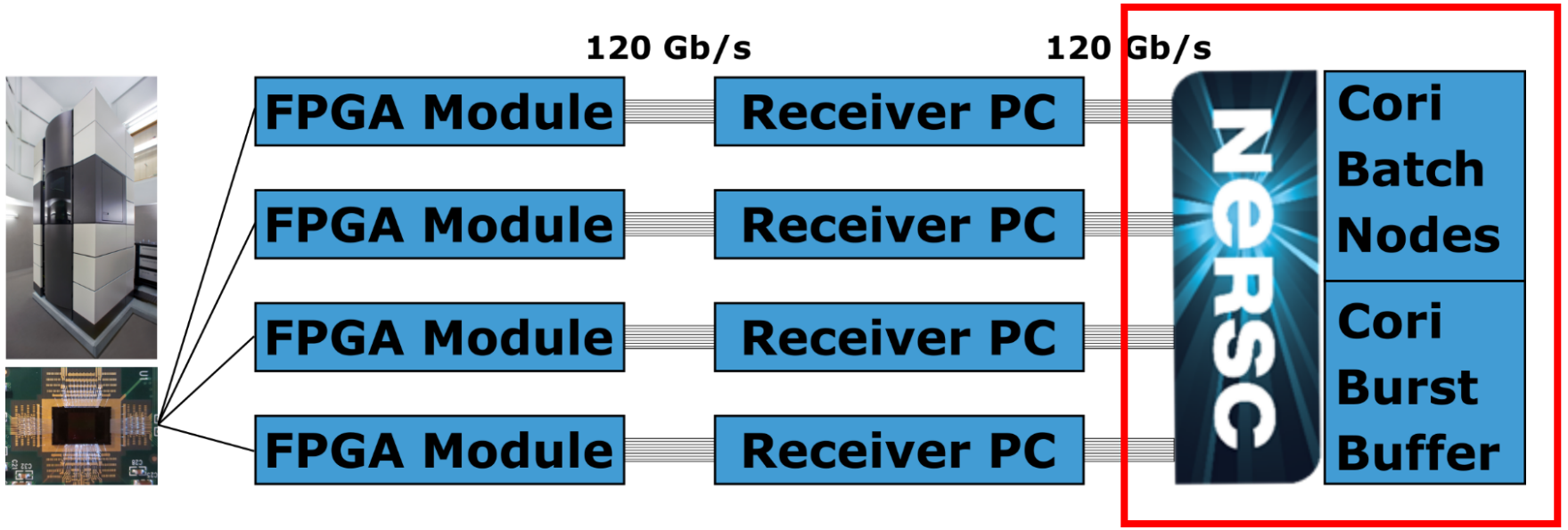

- Upgrade acquisition and analysis system (local buffer → NERSC)
- HAADF ring detector (even more data and signals)
- New installation at Brookhaven Nat. Lab (*in situ* TEM)
- In-line electron counting by FPGA (in-line data reduction)

Acknowledgements

4D Camera Team

A Minor, MC Scott, C Ophus, J Ciston, P Ercius
National Center for Electron Microscopy, LBL percius@lbl.gov

I Johnson, J Joseph, A Goldschmidt, P Denes
Detector group, Engineering Division, LBL

D Paul, B Draney, J Lee, D Skinner, A Selvarajan
National Energy Research Scientific Computing Center (NERSC), LBL

M Lent, P Manacop, C Czarnik
Gatan, Inc.

C Harris, P Avery , M Hanwell
Kitware

Samples

S Hsu, R Ramesh
STO/PTO, UC Berkeley

L Hughes
Lithium battery stack, NCEM, LBNL

S Stonemeyer, A Zettl
Filled nanowires, UC Berkeley

J Zhou, J Miao
Au NPs for ptychotomography, UC Los Angeles

Processing

P Pelz, H Brown, S Zeltmann, B Savitzky
S-matrix, Strain and DPC, LBNL

Next Molecular Foundry proposal call: Sept 1st
https://foundry.lbl.gov/user-program/